Bathroom Locks and Latches

2126

3 Lever Bathroom Deadlock

Application:

- For timber doors hinged on the left or right and requiring turn and emergency release functions

Specification:

- Deadbolt locked or unlocked by separate turn from inside or by emergency release from outside
- Available with square forend and striking plate
- Case Size: 65mm (2.5") or 77.5mm (3")
- Backset: 44.5mm or 57mm
- Case: Steel, silver powder coat
- Forend: Stainless steel or brass
- Striking Plate: Finished to match forend
- Deadbolt: Brass
- Latch Bolt: n/a
- Follower: Zinc, 5mm square
- Rebate Kit: 2969 (13mm, 19mm or 25mm)
- Available in SC and PL finishes

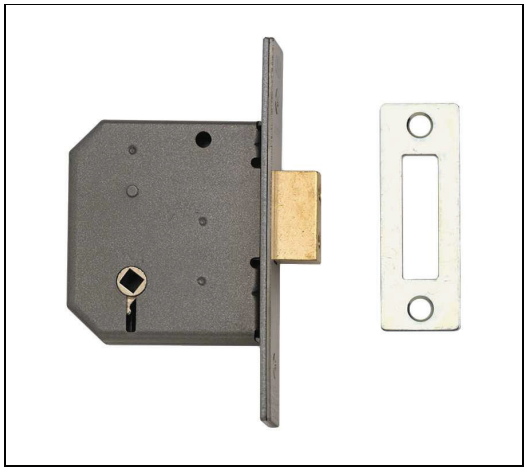

Standards:

Finish:

- SC - Satin Chrome finish
- PL - Polished Brass finish

Variants:

J2126-PL-2.50	3-Lever Bathroom Deadlock
J2126-PL-3.00	3-Lever Bathroom Deadlock
J2126-SC-2.50	3-Lever Bathroom Deadlock
J2126-SC-3.00	3-Lever Bathroom Deadlock
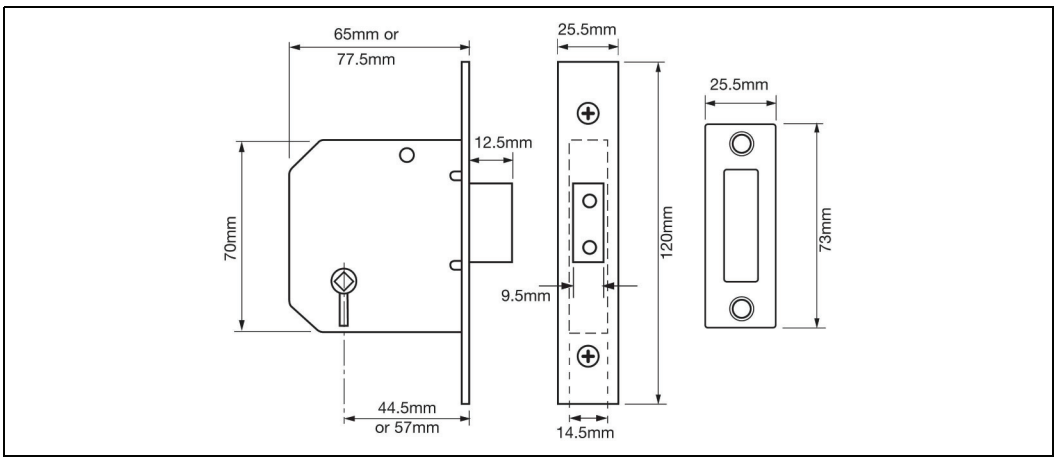
Technical Design: